Universal Cooker Hood Installation and Operation Manual

The instructions in this manual are for cooker hood models:

WRJ903U, WRJ600U, WRJ603U, WRJ611U, WRJ900U,WRJ911U,RHN6, RHN9, RFD602W, RFD602S,RFD902W,RFD902S

These cooker hoods are domestic appliances which have been manufactured and tested to comply with Australian and New Zealand Standard AS/NZS 3350.2.31.

Safety Warnings

- Young children should be supervised to ensure they do not play with the cooker hood.
- The cooker hood is not intended for use by young children or infirm persons without supervision.
- Ensure the cooker hood is switched off before carrying out maintenance, to avoid any possibility of electric shock.
- Grease filters must be removed every four weeks (maximum) for cleaning to reduce the risk of fire.
- Do not **flamb'e** under the cooker hood.
- This cooker hood is not recommended for **barbeques**.
- The exhaust air from the cooker hood must not be discharged into any heating flue, which may carry combustion products from other sources.
- Exhaust air must not be discharged into a wall cavity, unless the cavity is designed for the purpose.
- There must be adequate ventilation of the room when the cooker hood is used at the same time as appliances burning gas or other fuels.
- Always cover lit gas burners with pots or pans when the cooker hood is in use.
- Always switch off gas burners before you remove pots or pans.

Cleaning

Wipe the cooker hood body and flue with a sponge or soft cloth soaked in warm soapy water. **Do not** use oven cleaners or other abrasive materials.

Electrical Connection

- Check that the mains voltage matches with the voltage on the data plate inside the cooker hood.
- Check that the installation complies with standards of local gas and electricity authorities.
- If the supply cord is damaged, it must be replaced by the manufacturer or its service agent or a similarly qualified person in order to avoid a hazard.

Accessories

- Use 125mm round exhaust ducting for best performance.
- When using flexible duct always install duct with the wire helix pulled taut to minimise pressure loss.
- Try to keep exhaust duct short and straight.
- Keep bends in the exhaust duct to a minimum.
- Do not reduce the size or restrict exhaust duct.

Ducting Accessories

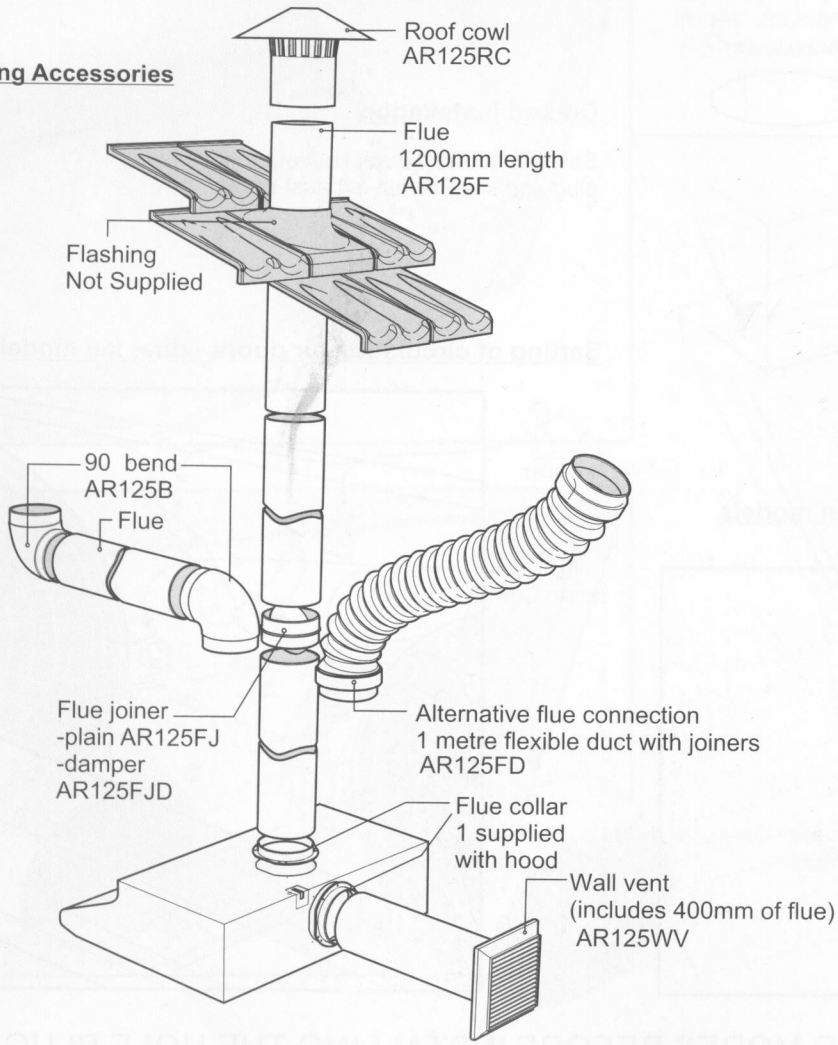

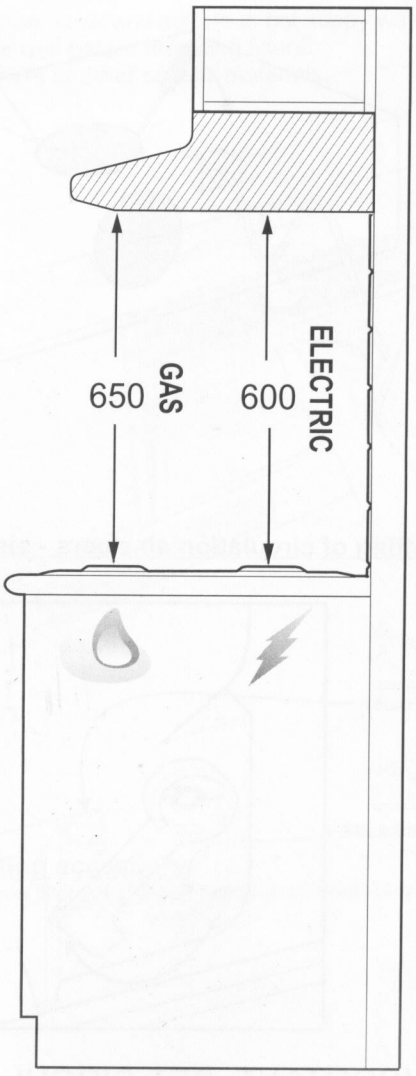

Stainless Steel Models

Before installing the cooker hood, remove all protective plastic covering from stainless steel surfaces.

Use at least 4 screws (not provided) and the mounting holes provided to securely mount the cooker hood.
Make sure that the cooker hood is level and free from twist.

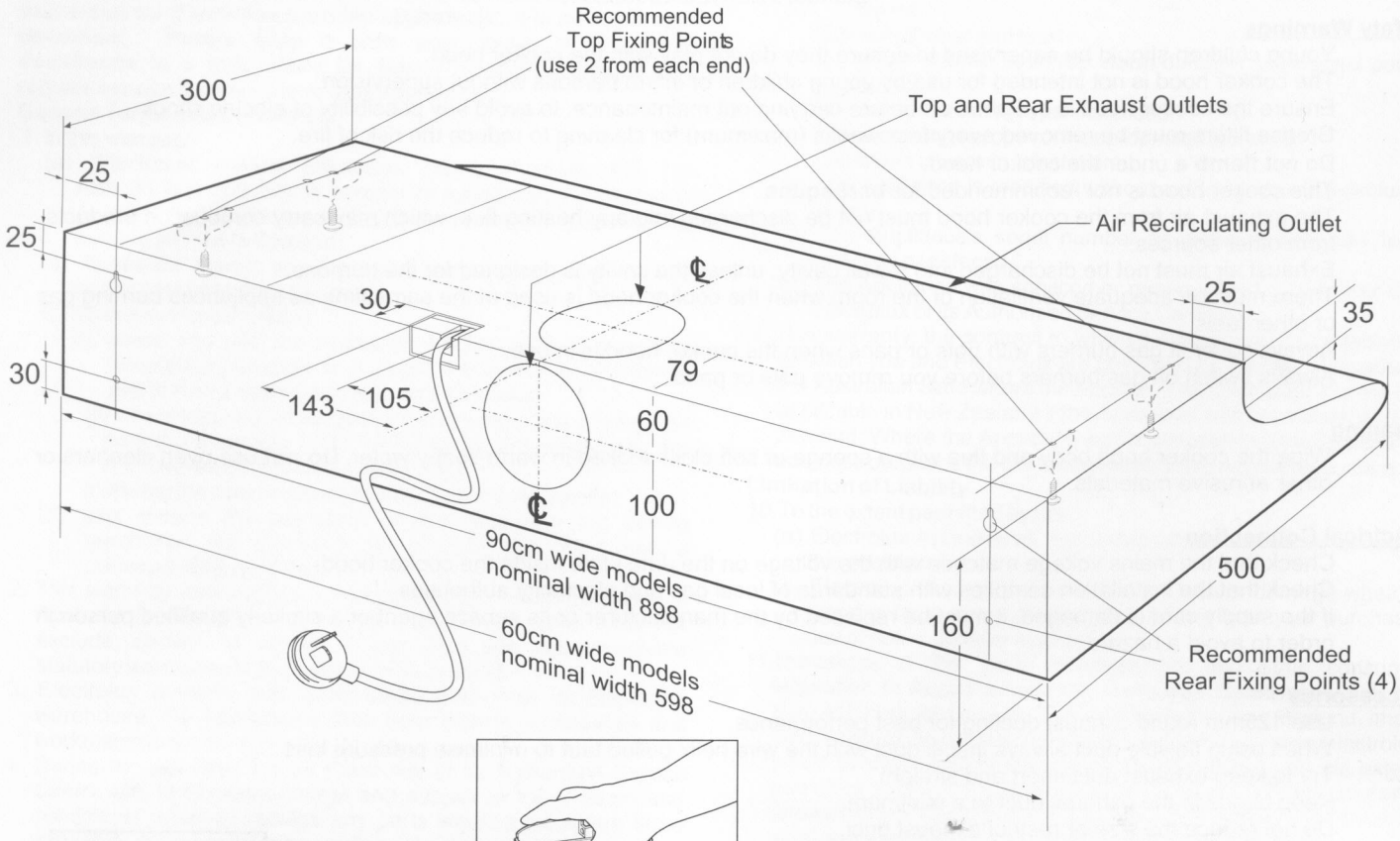

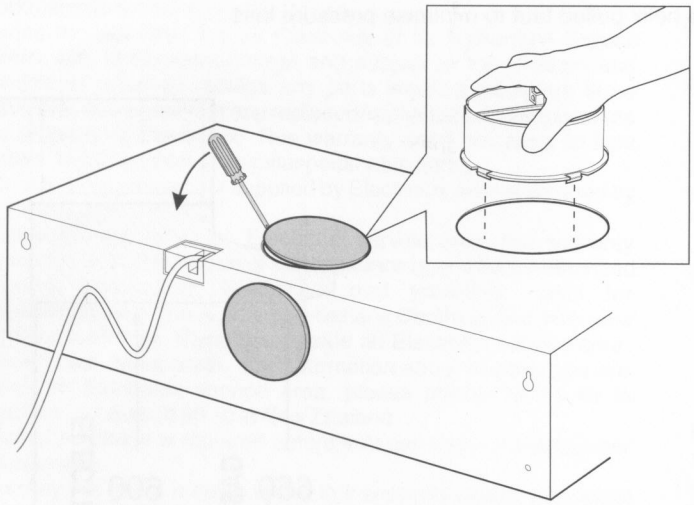

Ducted installation

Select required exhaust outlet, remove hole plug and snap fit flue exhaust collar.

Setting of circulation air doors - dual fan models

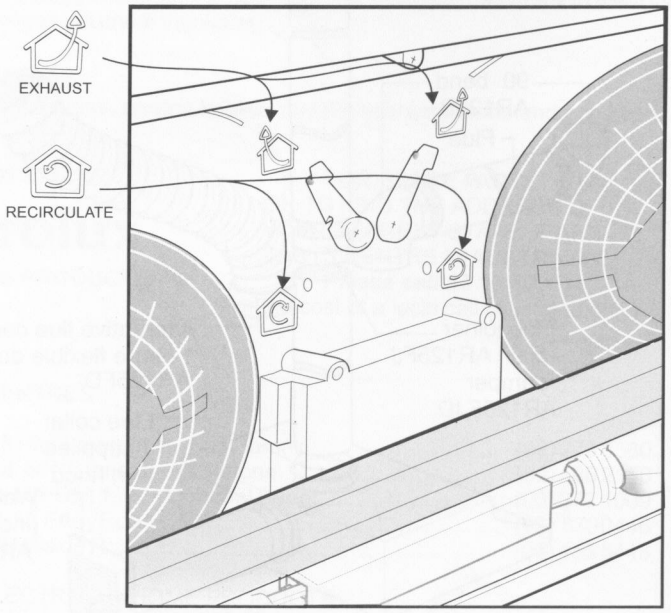

Setting of circulation air doors - single fan models

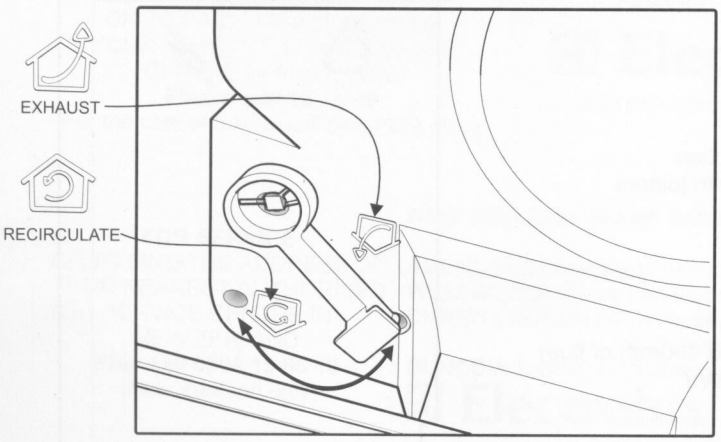

IMPORTANT: SET CIRCULATING MODES BEFORE INSTALLING THE HOLE PLUGS.

Cooker Hood Operation

Best results are obtained by using a low speed for normal conditions and a high speed when odours are more concentrated. Turn the hood on a few minutes before you start cooking. It should by left on after cooking for about 15 minutes or until all odours have disappeared.

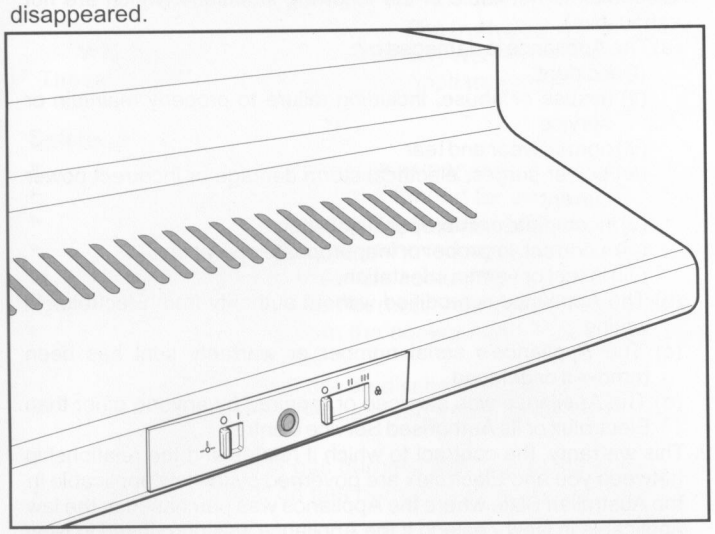

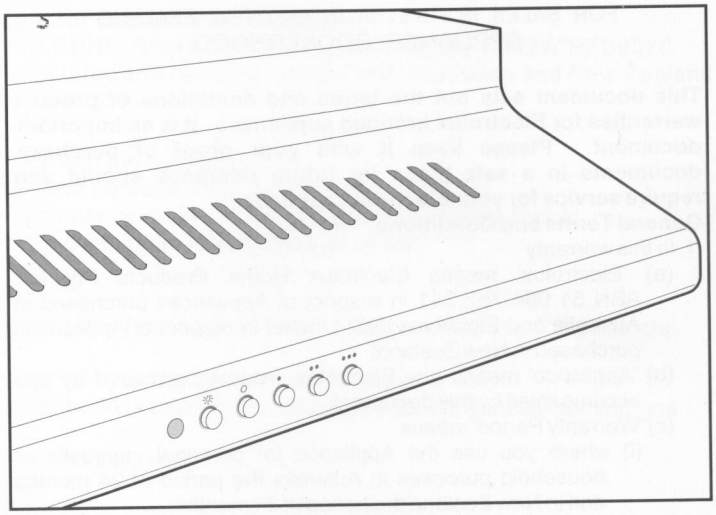

Slide switch controls

Light switch: This switch is used to turn the light fitted in the hood on and off.

Extractor fan switch: Used to select fan speeds

Slide position I: Fan speed Lo.

Slide position II: Fan speed Med.

Slide position III: Fan speed High.

Press button switch controls

Light switch: Depress light button to turn light **ON**. Press light button to turn light **OFF**.

Extractor fan switch interlocked switching: Select a fan speed, depress button to turn fan **On**. Press button **(O)** to turn fan **OFF**.

Replacing lamps:

Ensure the appliance is switched off before carrying out maintenance, to avoid any possibility of electric shock. Remove grease filter to replace lamp. Replace with 40W (maximum) E14 candle lamp.

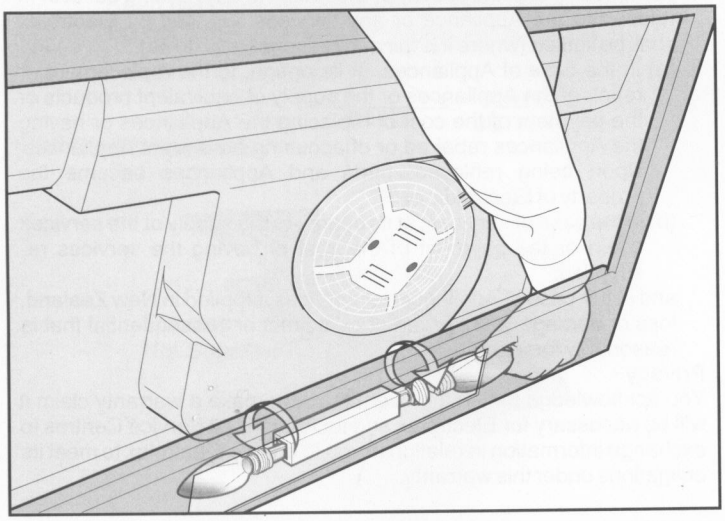

Maintenance:

Clean grease filters every three to four weeks maximum. Greasy filters are a fire risk.

Remove the grease filters, soak and agitate in hot soapy water. Rinse, drain and shake well before replacing filters.

Do not use oven cleaners or other caustic materials.

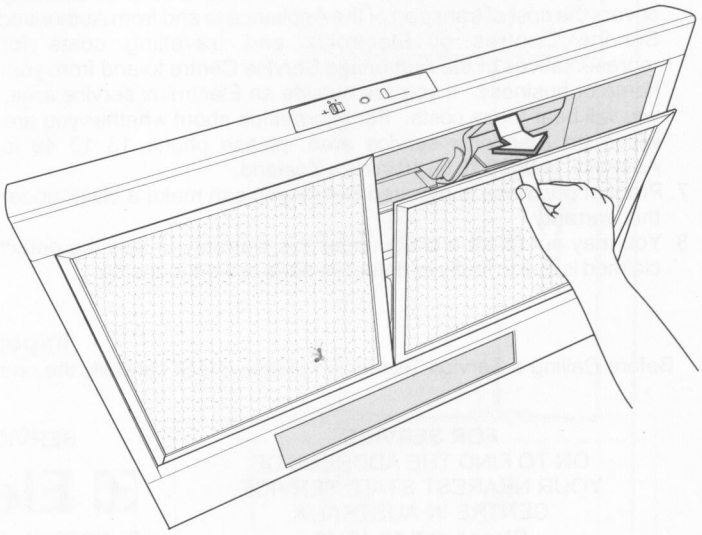

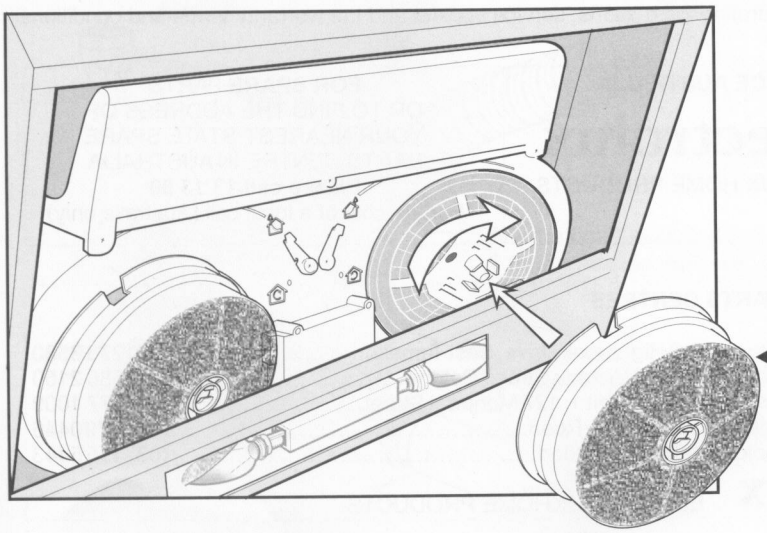

Recirculating accessory:

Optional carbon filter ARCFD for recirculating mode only.

Electrolux Warranty

FOR SALES IN AUSTRALIA AND NEW ZEALAND
APPLIANCE: COOKERHOOD

This document sets out the terms and conditions of product warranties for Electrolux branded appliances. It is an important document. Please keep it with your proof of purchase documents in a safe place for future reference should you require service for your Electrolux appliance.

General Terms and Conditions

1. In this warranty
   (a) 'Electrolux' means Electrolux Home Products Pty Ltd ABN 51 004 762 341 in respect of Appliances purchased in Australia and Electrolux (NZ) Limited in respect of Appliances purchased in New Zealand;
   (b) 'Appliance' means any Electrolux product purchased by you accompanied by this document;
   (c) 'Warranty Period' means
      (i) where you use the Appliance for personal, domestic or household purposes in Australia the period of 24 months and in New Zealand the period of 24 months;
      (ii) where you use the Appliance for commercial purposes, the period of 0 months; (if the period stated is 0 months you are not covered by this product warranty)
      following the date of original purchase of the Appliance;
   (d) 'you' means the purchaser of the Appliance not having purchased the appliance for re-sale, and 'your' has a corresponding meaning.
2. This warranty only applies to Appliances purchased and used in Australia or New Zealand and is in addition to (and does not exclude, restrict, or modify in any way) any non-excludable statutory warranties in Australia or New Zealand.
3. Electrolux warrants that, when dispatched from an Electrolux warehouse, the Appliance is free from defects in materials and workmanship for the Warranty Period.
4. During the Warranty Period Electrolux or its Authorised Service Centre will, at no extra charge and subject to these terms and conditions, repair or replace any parts which it considers to be defective. You agree that any replacedAppliances or parts become the property of Electrolux. This warranty does not apply to light globes, batteries, filters or similar perishable parts.
5. .Parts and Appliances not supplied by Electrolux are not covered by this warranty.
6. Where you are within an Electrolux service area, this warranty covers the cost of transport of the Appliance to and from Authorised Service Centres of Electrolux and travelling costs for representatives of the Authorised Service Centre to and from your home or business. If you are outside an Electrolux service area, you will bear these costs. For information about whether you are within an Electrolux service area, please phone 13 13 49 in Australia, or 0800 10 66 10 in New Zealand.
7. Proof of purchase is required before you can make a claim under this warranty.
8. You may not make a claim under this warranty unless the defect claimed is due to faulty or defective parts or workmanship.

   Electrolux is not liable in the following situations (which are not exhaustive):
   (a) The Appliance is damaged by:
      (i) accident
      (ii) misuse or abuse, including failure to properly maintain or service
      (iii) normal wear and tear
      (iv) power surges, electrical storm damage or incorrect power current
      (v) incomplete or improper installation
      (vi) incorrect, improper or inappropriate operation
      (vii) insect or vermin infestation.
   (b) The Appliance is modified without authority from Electrolux in writing.
   (c) The Appliance's serial number or warranty seal has been removed or defaced.
   (d) The Appliance was serviced or repaired by anyone other than Electrolux or its Authorised Service Centres.
9. This warranty, the contract to which it relates and the relationship between you and Electrolux are governed by the law applicable in the Australian State where the Appliance was purchased or the law applicable in New Zealand if the Appliance was purchased in New Zealand. Where the Appliance was purchased in New Zealand for business purposes the Consumer Guarantee Act does not apply.

Limitation of Liability

10. To the extent permitted by law:
    (a) Electrolux excludes all warranties other than as contained in this document;
    (b) Electrolux shall not be liable for any loss or damage whether direct or indirect or consequential arising from your purchase, use or non-use of the Appliance.
11. Provisions of the Trade Practices Act and State consumer legislation in Australia, and the Consumer Guarantees Act, the Sale of Goods Act and the Fair Trading Act in New Zealand, imply warranties or conditions, or impose obligations, upon Electrolux which cannot be excluded, restricted or modified. To the extent permitted by law, the liability of Electrolux (if any) arising out of or in relation to the Appliance or any services supplied by Electrolux shall be limited (where it is fair and reasonable to do so),:
    (a) in the case of Appliances, at its option, to the replacement or repair of the Appliances or the supply of equivalent products or the payment of the cost of replacing the Appliances or having the Appliances repaired or of acquiring equivalent Appliances. Upon being replaced, parts and Appliances become the property of Electrolux; or
    (b) in the case of services, at its option, to the supply of the services again or the payment of the cost of having the services re-supplied;
    and in the case of Appliances or services supplied in New Zealand, loss or damage whether direct or indirect or consequential that is reasonably forseeable.

Privacy

You acknowledge that in the event that you make a warranty claim it will be necessary for Electrolux and its Authorised Service Centres to exchange information in relation to you to enable Electrolux to meet its obligations under this warranty.

Important Notice

Before Calling a Service Technician please check carefully the operating instructions, service booklet and the warranty terms and conditions.

FOR SERVICE	SERVICE AUSTRALIA	FOR SPARE PARTS
OR TO FIND THE ADDRESS OF YOUR NEAREST STATE SERVICE CENTRE IN AUSTRALIA **Please call 13 13 49** For the cost of a local call (Australia only)	Electrolux ELECTROLUX HOME PRODUCTS	OR TO FIND THE ADDRESS OF YOUR NEAREST STATE SPARE PARTS CENTRE IN AUSTRALIA **Please call 13 13 50** For the cost of a local call (Australia only)

FOR SERVICE
OR TO FIND THE ADDRESS OF YOUR NEAREST AUTHORISED SERVICE CENTRE IN NEW ZEALAND
Free call 0800 10 66 10
(New Zealand only)

NEW ZEALAND SPARE PARTS CENTRES

AUCKLAND Prime Distributors Ltd. 8 Highbrook Drive, East Tamaki.....	(09) 273 3580
WELLINGTON Prime Distributors Ltd. 68 Victoria Street, Petone.....	(04) 586 2150
CHRISTCHURCH Prime Distributors Ltd. Unit 1, 127 Montreal Street.....	(03) 377 1009
R.Redpath Ltd. 55 Ferry Road.....	(03) 3790446
DUNEDIN South City Champion, 590 Hillside Road.....	(03) 455 5443

Electrolux ELECTROLUXHOME PRODUCTS

Issue 01 30/8/04